SALES DRAWING SALES DRAWING

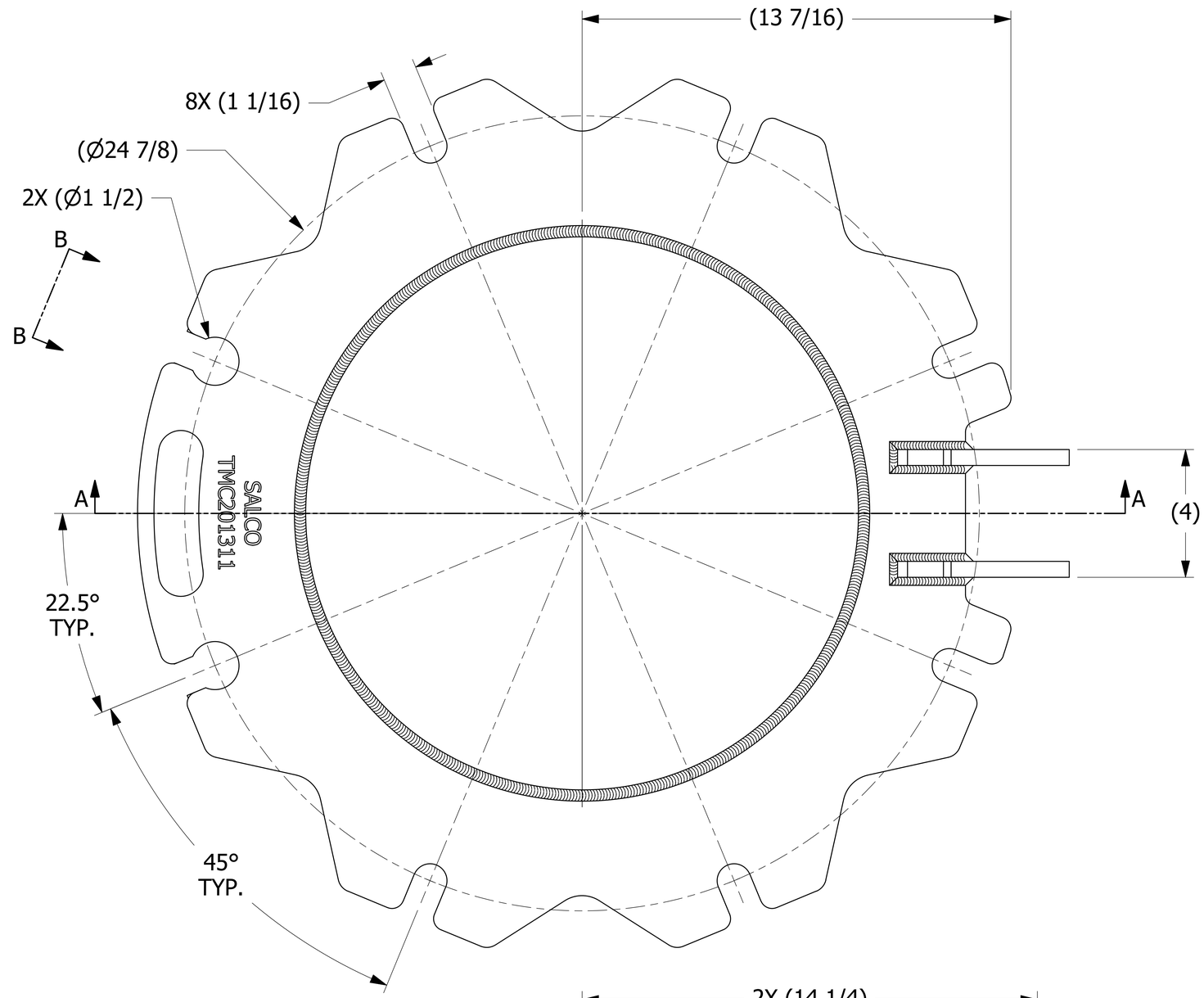

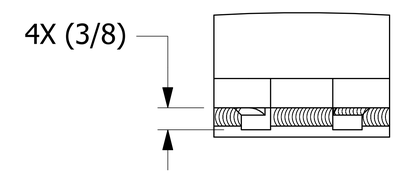

VIEW B-B
SCALE 1 : 1

NOTE:
AAR APPROVAL # E-182113.

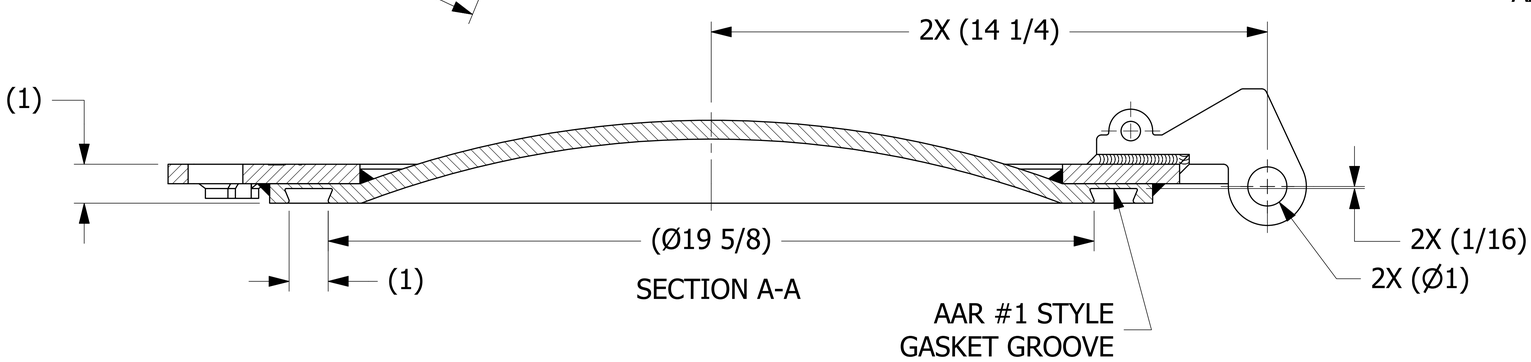

SECTION A-A

REV	BY	DATE	DESCRIPTION
D	WEB	5-15-19	REMOVED QAP4A-1 NOTE; Q-2.15.7 WAS QAP4C-1; D-008 WAS DSS 12; ADDED D-005 NOTE; AAR # WAS E-089005
C	RJP	11-16-17	HINGE WELD WAS 3/8"; 4.00 +.00/-.06 WAS 4.00; ADDED (13 7/16) & NOTE 6; ADDED "SALCO" TO ENGRAVING; UPDATED WELD NOTE TO DSS 12
B	JG	10-3-16	TMCDR201311 WAS TMCR2013S6 & TMCDSS6MF; C42806 WAS TMCHS4A; UPDATED DIMS, NOTES
A	DGP	01-24-13	RELEASED FOR PRODUCTION

UNLESS OTHERWISE SPECIFIED
DIMENSIONAL TOLERANCES
FRACTIONAL: ±1/16
X.XX: ±.03
X.XXX: ±.015
ANGULAR: ±1°
DEBURR ALL SHARP EDGES.
ALL MACHINED SURFACES TO HAVE A 125 RMS FINISH UNLESS NOTED OTHERWISE.
THIRD ANGLE PROJECTION

DRAWN BY:	DGP
CHECKED BY:	CHL
PROTOTYPE BY:	DGP
PROTOTYPE DATE:	1/3/2013
APPROVED FOR PRODUCTION BY:	DGP
PRODUCTION DATE:	1/24/2013

SALCO PRODUCTS, INC.

PART NAME: MANWAY COVER 20" 8-BOLT

MATERIAL: 316L SS

PROJECT #: 121217FR1 | SHEET #: 1 OF 1 | SCALE: 2:3

DRAWING #: E34976 | PART #: TMC201311

THIS PRINT, PROPERTY OF SALCO PRODUCTS INC, CONTAINS PROPRIETARY INFORMATION AND MUST NOT BE COPIED, REPRODUCED, OR USED DETRIMENTALLY TO OUR INTEREST.

SALES DRAWING SALES DRAWING